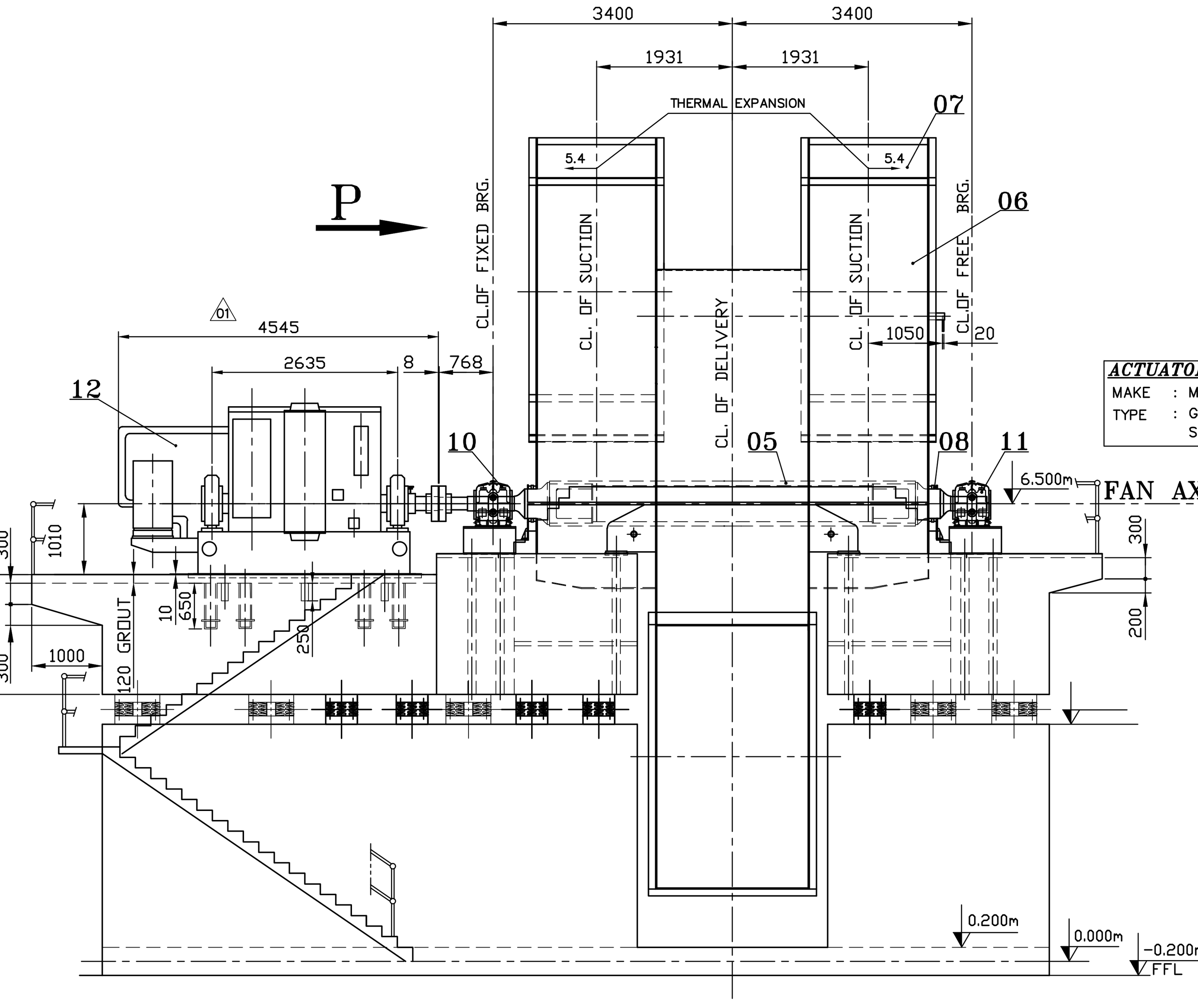

ELEVATION

ACTUATOR DETAILS:-
MAKE : M/s. AUMA (I) Ltd.
TYPE : GF 250+GZ25.1 WITH SAR 30 EPAC ACTUATOR

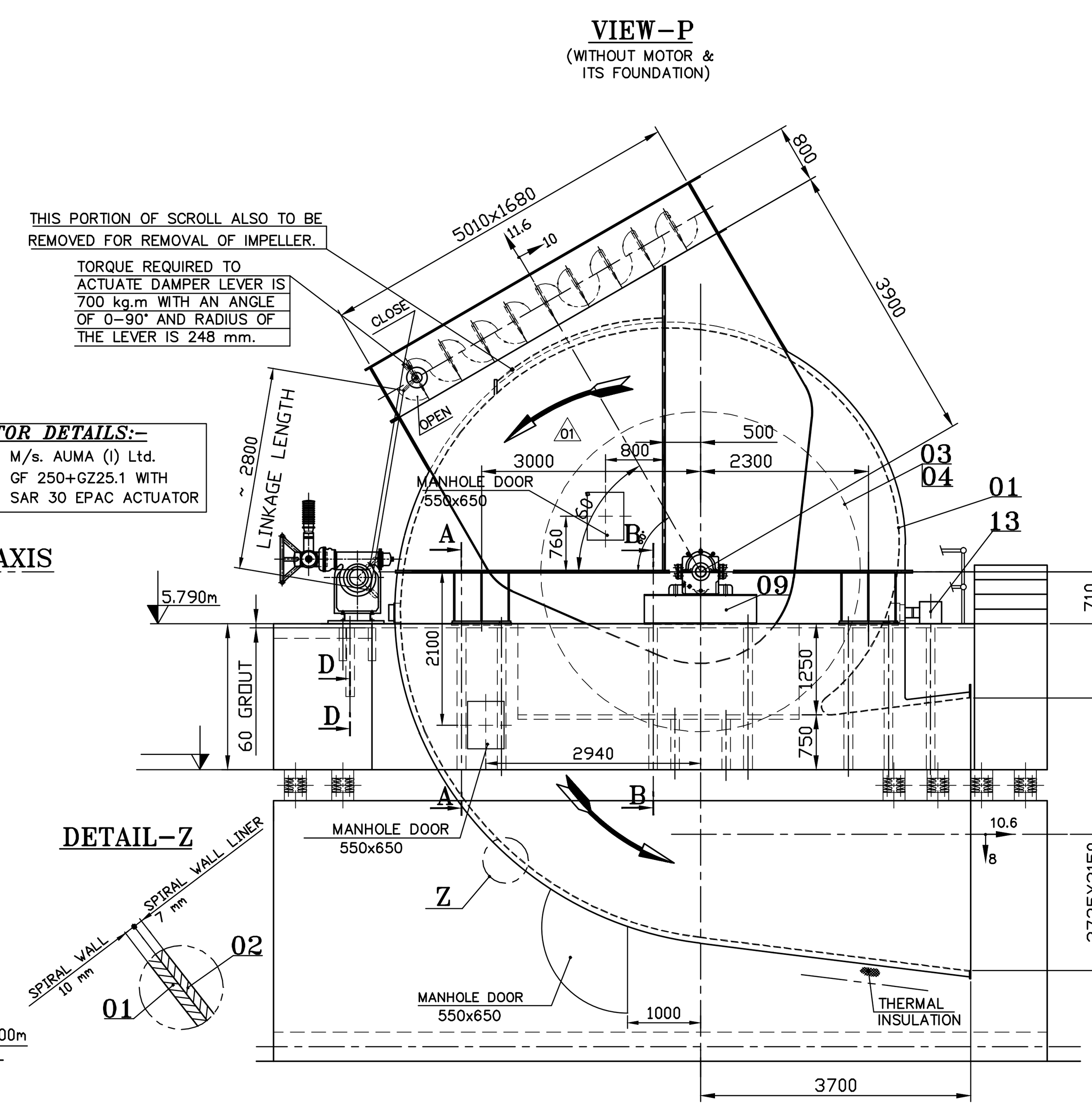

SUCTION FLANGE

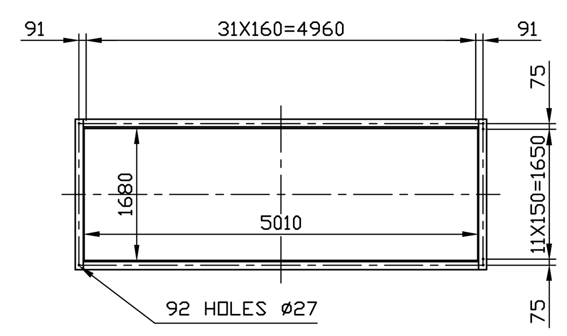

DELIVERY FLANGE

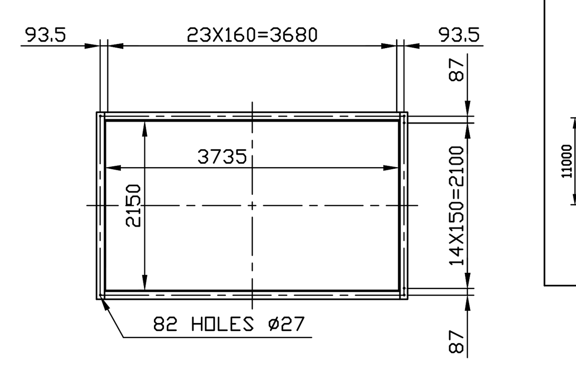

KEY PLAN

REFER DRG. NO. 0-00-020-75537
(KEY PLAN SHOWN IS INFORMATIVE ONLY. FOR EXACT LOCATION, REFER BOILER LAYOUT OF ID SYSTEM - PLAN)

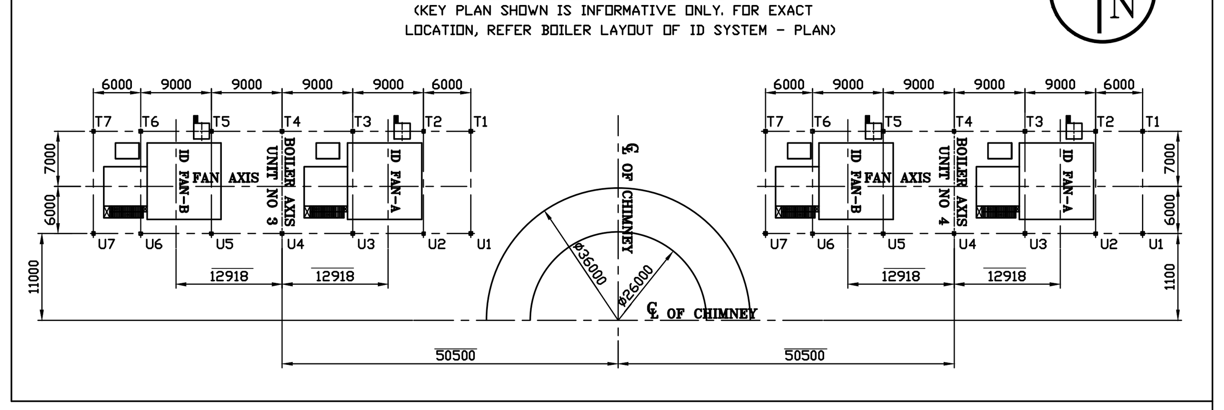

SECTION-DD

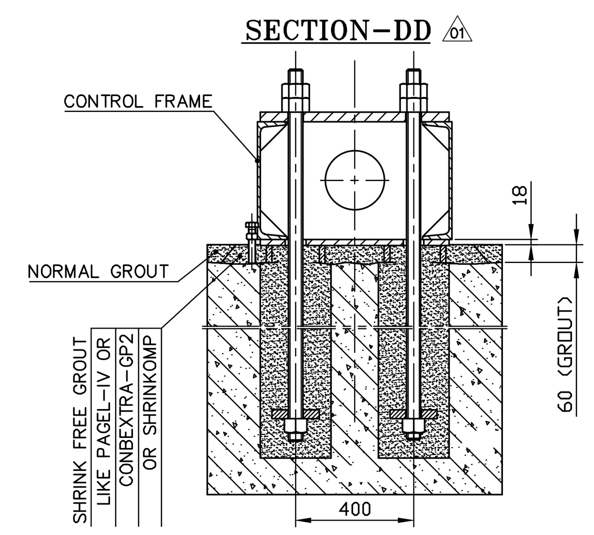

FOUNDATION PLAN

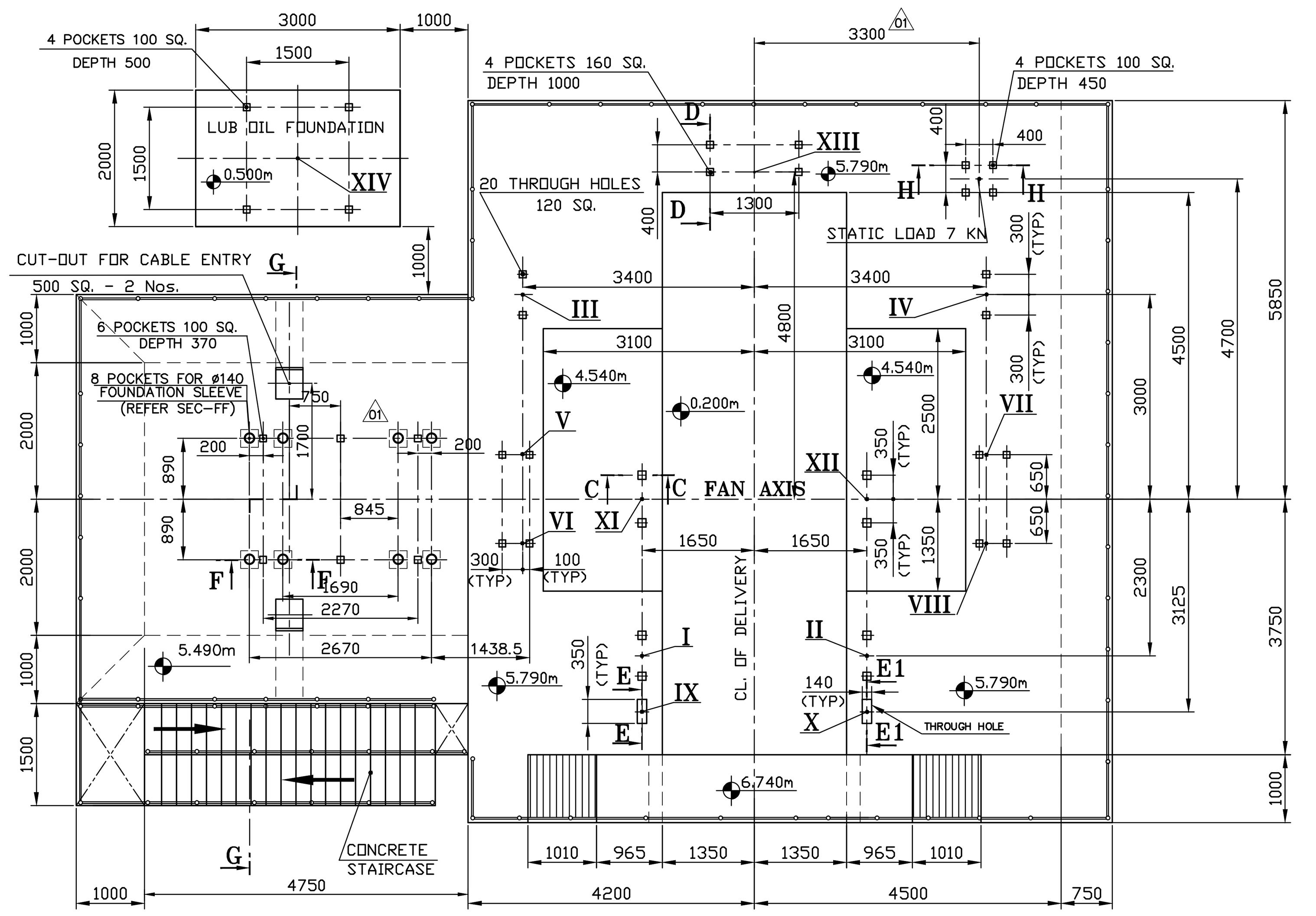

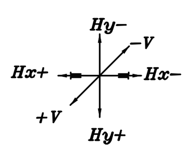

LOAD DATA FOR FOUNDATION

LINE	LOAD POINT (COLUMN)	SUPPORTING FORCE RESULTING FROM OWN WEIGHT (KN) V	LOAD CASE	MAX. PERMISSIBLE UNBALANCE FORCE REFERRED TO SUPPORTING POINT (KN) ±V	±Hy	FORCE DUE TO AXIAL THRUST (KN) Hx	SUPPORTING FORCE RESULTING FROM PRESSURES, IMPULSES BRG. THRUST & NORMAL MOMENT OF MOTOR (KN) V	Hx	Hy	SUPPORTING FORCE DUE TO THERMAL EXPANSION (KN) Hx	Hy
	1	2	3	4	5	6	7	8	9		
1	I	92	1				-26.2			±11.8	±8.1
			2								
2	II	92	1				-26.2			±11.8	±8.1
			2								
3	III	203	1				-13.2			±20.1	±22.8
			2								
4	IV	203	1				-13.2			±20.1	±22.8
			2								
5	V	58	1	43.1		±13					
			2	23.5	43.1						
6	VI	58	1	43.1		±13					
			2	23.5	43.1						
7	VII	55	1	43.1							
			2	23.5	43.1						
8	VIII	55	1	43.1							
			2	23.5	43.1						
9	IX	3	1							±1.4	
			2								
10	X	3	1							±1.4	
			2								
11	XI	3	1						±17.5	±1.4	
			2								
12	XII	3	1						±17.5	±1.4	
			2								
13	XIII	4	1								±21.2
			2								
14	XIV	30	1								
			2								

BILL OF MATERIAL

SL NO	DESCRIPTION	MATERIAL	THICKNESS mm	QTY
16	SHIMS	STAINLESS STEEL	-	AS REQD.
15	PRIMARY PACKER	IS 2062	20	AS REQD.
14	FOUNDATION FASTENERS FOR FAN	ASTM A105	-	AS REQD.
13	CONTROL FRAME	IS 2062	-	4
12	MOTOR WITH FNDN. FASTENERS	REFER MOTOR DRG	-	1
11	FREE BEARING ASSEBLY	8" RTL	-	1
10	FIXED BEARING ASSEMBLY	8" RTL	-	1
09	BEARING PEDESTAL	IS 2062	-	2
08	LABYRINTH TYPE SHAFT SEAL	IS 2062 WITH CAF	-	2
07	INLET DAMPER CONTROL ASSEMBLY	IS 2062	10	2
06	SUCTION CHAMBER	IS 2062	10/12	2
05	SHAFT ASSEMBLY	TUBE: 15Mo3 END PINS: ST500V/2C35/EQU.	-	1
04	LINER FOR BLADES OF IMPELLER	XAR 400	10	11
03	BLADES OF IMPELLER	NAXTRA 70/EQU. (FINE GRAIN STEEL)	18	11
02	SPIRAL WALL LINER ASSY.	XAR 400	7	1
01	SPIRAL CASING ASSY.	IS 2062	10/16	1

WATER CONNECTING DETAIL OF 8" RTL BEARING

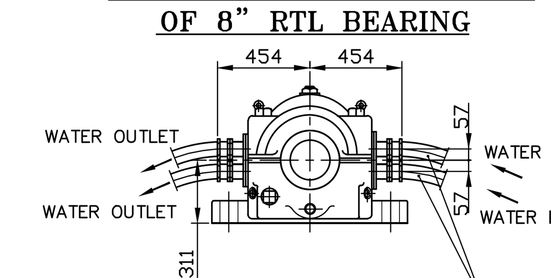

USE FLEXIBLE HOSE WITH FP2" FEMALE UNIONS FOR CONNECTING THE WATER LINES WITH INLET AND OUTLET OF THE BRG. (BHEL/BAP SCOPE OF SUPPLY)
COOLING WATER REQUIREMENT PER FAN : 6m³/hour

SECTION-AA
(DURING ERECTION)

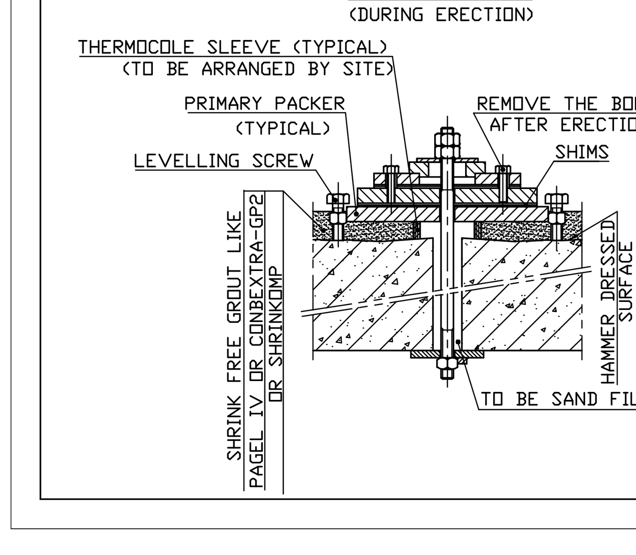

SECTION-AA
(AFTER ERECTION)

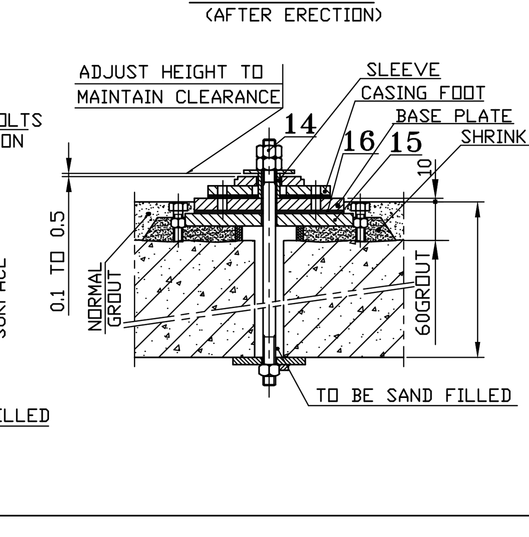

SECTION-BB

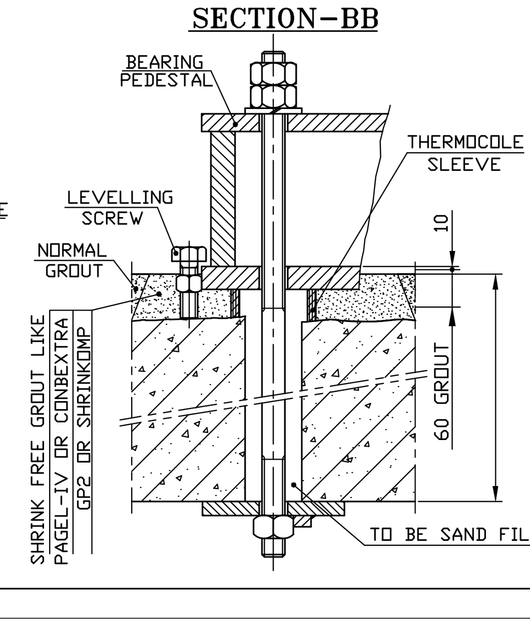

UNMARKED DIMENSIONS SHALL BE FURNISHED AFTER FINALISATION OF VIS DESIGN

SECTION-E1E1

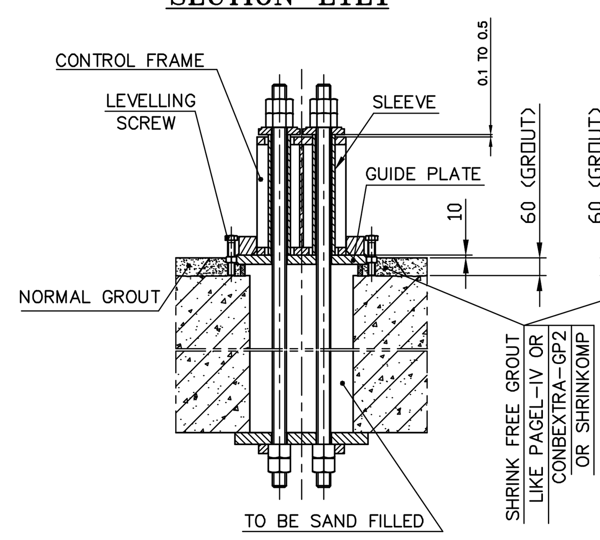

SECTION-EE

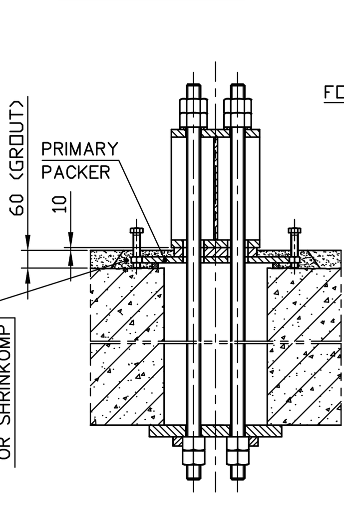

SECTION-FF

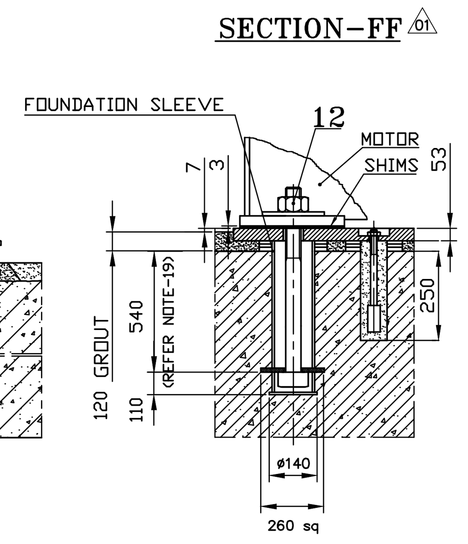

SECTION-CC

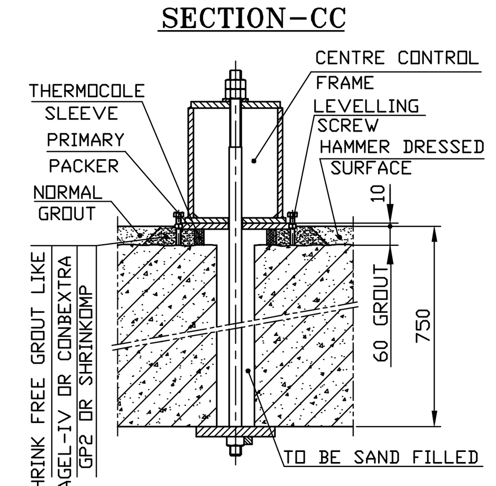

SECTION-GG

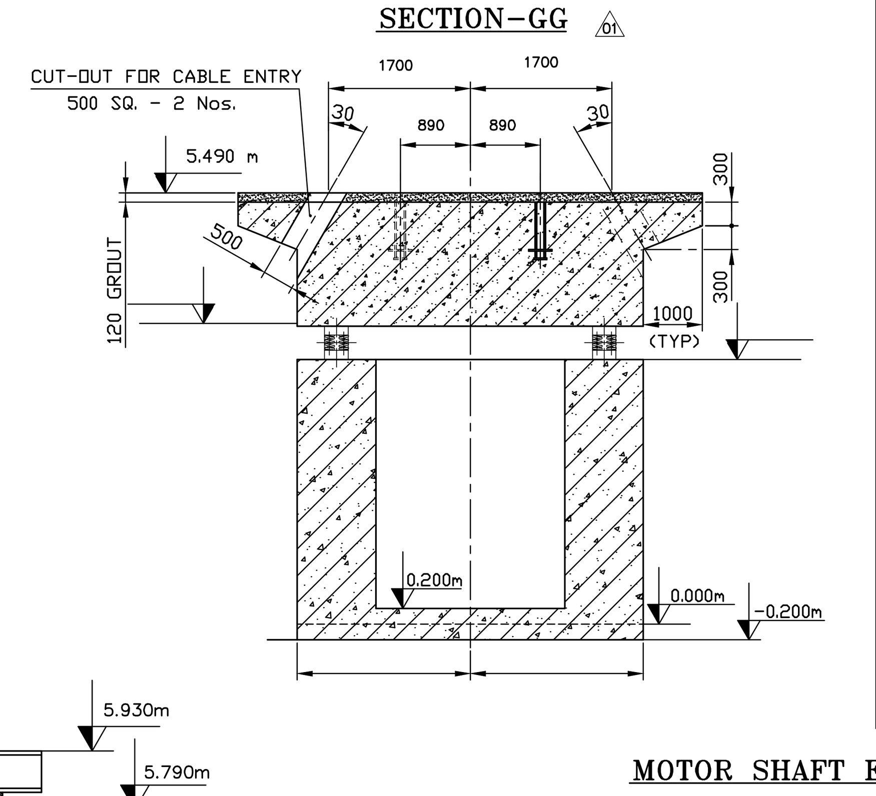

SECTION-HH

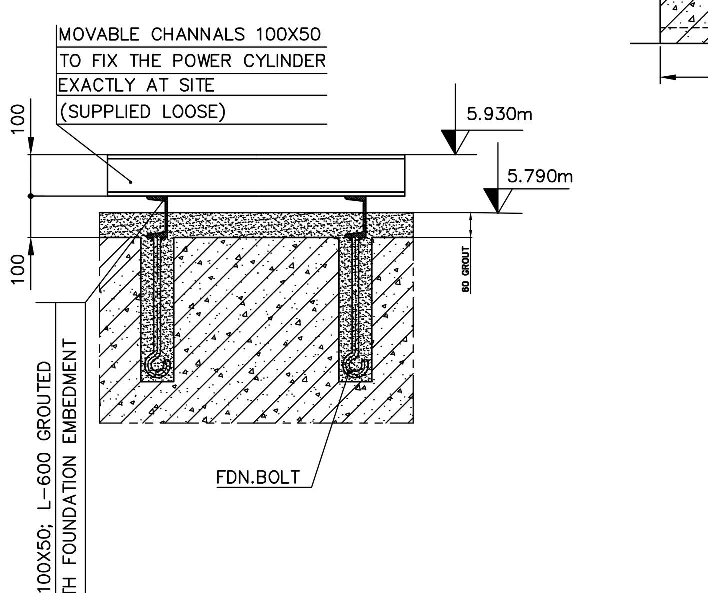

NOTES:-

01. THE LOADS INDICATED ON FOUNDATION ARE WITHOUT ALLOWANCES FOR VIBRATIONS. CIVIL DESIGNER IS RESPONSIBLE FOR PROPER DESIGN OF FOUNDATION TAKING INTO ACCOUNT OF THE ALLOWANCES FOR VIBRATION ALSO.
02. THE NATURAL FREQUENCY OF THE FOUNDATION SHOULD BE MINIMUM +20% AWAY FROM THE OPERATING FREQUENCY OF THE FAN. THE NATURAL FREQUENCY OF THE CONNECTING DUCT AND SUPPORTING STRUCTURE SHOULD BE CLEARLY AWAY FROM THE OPERATING FREQUENCY OF THE FAN.
03. ADOPT IS: 2974 / PART-IV FOR THE FOUNDATION DESIGN.
04. THE CONNECTING DUCTS AT INLET AND OUTLET OF FAN ARE SELF SUPPORTED AND SHOULD NOT BE WELDED WITH EXPANSION JOINTS.
05. FOUNDATION POCKETS SHOULD BE PERPENDICULAR TO THE FLAT SURFACES OF FOUNDATION.
06. ACCURATE TEMPLATES SHALL BE USED FOR LOCATING CORES FOR POCKET HOLES TO ENSURE THEIR DIMENSIONAL ACCURACY.
07. TOLERANCE BETWEEN ANY TWO POCKET CENTRES ±5 mm.
08. TOLERANCE ON CONCRETE LEVELS $^{+0}_{-25}$mm.
09. IN AREAS WHERE SOLE PLATES AND ANCHOR PLATES ARE TO BE INCORPORATED IN FOUNDATION CONCRETE, THE SIZE OF THE COARSE AGGREGATE USED SHALL NOT EXCEED 20 mm AND DOWN GRADED TO FACILITATE CHIPPING AND SCRAPPING THEREBY ENSURING MAXIMUM CONTACT ON THE MATING AREAS.
10. NON-SHRINK GROUT IS TO BE USED. REFER GENERAL SPECIFICATIONS ISSUED BY BHEL/RANIPET FOR NON-SHRINK GROUT. THIS ALSO CONTAINS THE PREPARATIONS OF PRIMARY PACKERS & SHIMS.
11. GROUTING SHOULD BE DONE ONLY AFTER FINAL ALIGNMENT OF FAN.
12. ELEVATIONS SHOWN IN FOUNDATION PLAN INCLUDE GROUT THICKNESS.
13. GROUTING IS IN THE SCOPE OF BHEL.
14. CANOPY OF MOTOR, HANDRAILS, STEEL PLATFORMS, STEEL STAIRS, LADDERS & THEIR EMBEDMENTS ARE IN THE SCOPE OF BHEL/TRICHY.
15. FAN FOUNDATION SHOULD NOT BE USED AS SUPPORT FOR OTHER STRUCTURES OR EQUIPMENTS.
16. FOUNDATION CONFIGURATION SHOWN IN THIS DRAWING IS ONLY INFORMATIVE/TYPICAL. TYPE AND DETAILS OF FOUNDATION ARE TO BE FINALISED BY CIVIL DESIGNER.
17. FOR MOTOR ERECTION, REFER MOTOR SUPPLIER'S ERECTION MANUAL.
18. VIBRATION ISOLATION SYSTEM (V.I.S) ARE IN THE SCOPE OF P.E.M/BHEL/NEW DELHI. THE V.I.S TYPE & QUANTITY SHOWN IN THIS DRAWING ARE TYPICAL ONLY. ON RECEIPT OF EXACT TYPE & QUANTITY FROM P.E.M, THE SAME WILL BE UPDATED.
19. FOUNDATION SLEEVE FOR MOTOR IS EMBEDDED IN CONCRETE AS PER THIS DIMENSION. AFTER CONCRETE HAS SET THE EXCESS PROTRUDING HEIGHT OF SLEEVE IS TO BE CUT OFF.
20. ELEVATION 0.0 M CORRESPONDS TO RL 56.5 M. PAVING LEVEL IN THE BOILER, ESP, CHIMNEY AREA IS -0.2 M.

FAN DETAILS:-

TYPE	: NDZV 40 SIDOR
WEIGHT OF FAN WITHOUT MOTOR & COUPLING	: 75000 Kg
WEIGHT OF ROTATING PARTS	: 18500 kgs.
GD^2 OF FAN	: 98650 kg.m²
SPEED OF FAN	: VARIABLE (100 - 600 RPM)
NO. OF FANS PER BOILER	: TWO (IDENTICAL)
MAX. WEIGHT TO BE HANDLED FOR MAINTENANCE	: 21600 Kg

MOTOR DETAILS:-

MAKE	: M/s. BHEL / BHOPAL
TYPE	: 1DQ4139-12/IP55/2X2300V
RATING	: 2225 KW AT 556 RPM (12P) 1050 KW AT 401 RPM (6P)
WEIGHT OF STATOR	: 4250 KGs
WEIGHT OF ROTOR	: 7800 KGs
TOTAL WEIGHT OF MACHINE	: 21600 KGs
MOTOR DRAWING NO.	: 14030040498 / 00

FOUNDATION LOADING DATA OF MOTOR

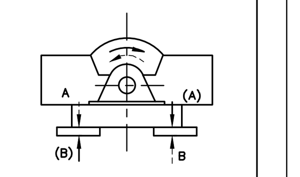

MAX.FORCE CALCULATED FROM THE MAX. SUDDEN TORQUE Ms = 161 KN (THREE PHASE SHORT CIRCUIT)
FORCE EXERTED BY THE WEIGHT ON EACH SIDE G = 108 KN
FOUNDATION LOAD ON EACH SIDE COMPRESSIVE LOAD A = MS+G = 269 KN
FOUNDATION LOAD ON EACH SIDE TENSILE LOAD B = MS-G = 53 KN

1. THE FORCES OCCUR ALTERNATIVELY INDEPENDENT OF THE DIRECTION OF ROTATION ------> (A) & (B) ARE THE DIRECTION OF FORCES IN SECOND HALF CYCLE.
2. THE CALCULATION AND CONSTRUCTION OF THE FOUNDATION IS THE RESPONSIBILITY OF THE CIVIL ENGINEERING COMPANY
3. THE TRANSFER OF VIBRATIONS FROM SURROUNDING EQUIPMENT HAS TO BE AVOIDED BY SUITABLE LAYOUT OF FOUNDATION.
4. THE NATURAL FREQUENCIES OF THE FOUNDATION AFTER ERECTION OF THE MACHINE MUST DIFFER AT LEAST +20% FROM ONE AND TWO TIMES RUNNING SPEED FREQUENCIES AND TWO TIMES THE ELECTRICAL FREQUENCY.

MOTOR COOLER DATA:

TOTAL WATER FLOW RATE (FOR TWO ELEMENTS) = 350 LPM
WATER INLET / OUTLET TEMPERATURE = 38°C/43°C
PRESSURE DROP = 0.4 bar
OPERATING PRESSURE = 6 bar (Max).
TEST PRESSURE = 10 bar

MOTOR BRG. LUBRICATION		
	D.E	N.D.E
BEARING SIZE	ø220	ø220
OIL FILLING QTY.	28 litres	28 litres
LUBRICATION	RING LUBRICATED	
OIL GRADE	IOC SERVOPRIME - 68 OR EQUIVALENT	

MOTOR SHAFT END

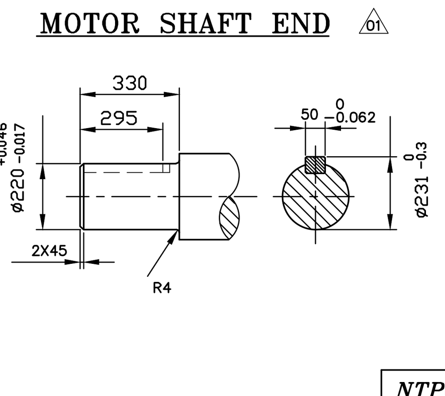

FAN SHAFT END

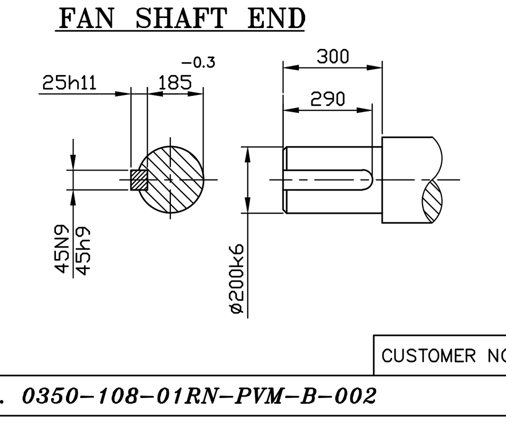

REV	DATE	ALTERED: K.KIRAN
01	26.08.2011	CHECKED: SELVARAJ

DRAWING UPDATED AS PER CUSTOMER COMMENTS VIDE TRANSMITTAL PE:MTPP2:0350108:297 DT 17.12.2010
A) MOTOR AND ITS FOUNDATION DETAILS UPDATED.
B) ACTUATOR AND ITS FOUNDATION DETAILS UPDATED.
C) NOTE-20 ADDED.

CUSTOMER NO. R212 & R213

NTPC DRG.NO. 0350-108-01RN-PVM-B-002

KANTI BIJLEE UTPADAN NIGAM LIMITED
(A JOINT VENTURE BETWEEN NTPC LTD. & BSEB)
MUZAFFARPUR THERMAL POWER PROJECT
STAGE-II (2x195 MW) UNITS-3&4

CAUTION: THE INFORMATION IN THIS DOCUMENT IS THE PROPERTY OF BHARAT HEAVY ELECTRICALS LIMITED. IT MUST NOT BE USED DIRECTLY OR INDIRECTLY IN ANY WAY DETRIMENTAL TO THE INTEREST OF THE COMPANY.

BHARAT HEAVY ELECTRICALS LTD.
BOILER AUXILIARIES PLANT
RANIPET - 632 406

DRAWN	S.M	S.MOHANA/OL	TITLE: *GENERAL ARRANGEMENT OF I.D FAN NDZV 40 SIDOR*
CHECKED	R.G.	R.GIRIDHAR	
APPROVED	V.P.S	[signature]	
DATE	10.11.2010		
ALL DIMENSIONS ARE IN mm		SCALE 1:30	DRAWING NO. *1-00-099-21935* REV. *01*

Size A1